Godrej

INCRUST

PREMIUM RANGE OF FINISHES.

Meaning: cover or decorate something with a hard surface layer

Product Detailer

Popular Mortise

Incrust| Premium Range of finishes in Popular Mortise

Godrej INCRUST
PREMIUM RANGE OF FINISHES.

- Continuing the exemplary success of North Euro-profile Handle (NEH) series we continue to dominate Mortise segment by bringing new designs & finishes
- We introduce 2 contemporary designs viz NEH 19 & NEH 20 & 3 new finishes viz Black Antique Copper, Matt Black Nickel & Matt Black Rose
- Designed by our best-in-class industrial designers considering current and future trends in market
- The target customers are builders, architects, end customers etc.
- Pin cylinder mortise locks are the fastest growing and maximum volume segment in mortise category.
- Lock body and Cylinders are available in complementing finishes
- 1 Year Warranty is a symbol of company's confidence on its product which is a selling point for the customer.

Incrust| New finishes to be launched in existing & new designs to make significant impact in market

Godrej INCRUST
PREMIUM RANGE OF FINISHES.

	Existing Designs	New Designs
New Finishes	**Existing designs (NEH 06 & Gloria)** in fast moving SKU's to be introduced in new finishes	**New designs (NEH 19 & NEH 20)** to be introduced in new finishes
Existing Finishes	**Continue to promote** Existing designs in existing finishes to improve market share	**New designs (NEH 19 & NEH 20)** to be introduced in existing finishes (Satin & Ant Brass)

Existing Designs in New Finishes

NEH 06

Gloria

Black Antique Copper

Matt Black Rose

Matt Black Nickel

Godrej

INCRUST

PREMIUM RANGE OF FINISHES.

NEH 19

NEH 20

New Approach | Handle & Lock body combi pack to be made to give flexibility of choosing cylinder to end user

New Combi

Lock Body

Pair of handles

Separate Cylinder
(already exists)

60 mm 1CK/ 2C cyl

New SKUs in SS & AB Finish:

1. 200 mm Handle & Lock Body Combipack
2. 240 mm Handle & Lock Body Combipack

*Cylinders to be bought separately

Benefits of new approach

- End customer gets to chose cylinder of required technology
- End customer gets to chose cylinder based on door thickness
- Retailer can buy only required sizes of cylinders
- Pilot to be done with NEH 19 & 20 along with new finishes in Gloria & NEH 06

Godrej
INCRUST
PREMIUM RANGE OF FINISHES.

Design Name: NEH 19

Finish Name: Satin Steel

Available Variants:

1. 240 mm 2C Combipack
2. 240 mm 1CK Combipack
3. 200 mm 2C Combipack
4. 200 mm 1CK Combipack
5. Baby Latch Set
6. Rosette

New Approach

7. 200 mm Handle & Lock Body Combipack
8. 240 mm Handle & Lock Body Combipack

Lock Body Finish: Chrome

Cylinder Finish: Satin Nickel

Godrej
INCRUST
PREMIUM RANGE OF FINISHES.

Design Name: NEH 19

Finish Name: Antique Brass

Available Variants:

1. 240 mm 2C Combipack
2. 240 mm 1CK Combipack
3. 200 mm 2C Combipack
4. 200 mm 1CK Combipack
5. Baby Latch Set
6. Rosette

New Approach

7. 200 mm Handle & Lock Body Combipack
8. 240 mm Handle & Lock Body Combipack

Lock Body Finish: Antique Brass

Cylinder Finish: Antique Brass

Godrej
INCRUST
PREMIUM RANGE OF FINISHES.

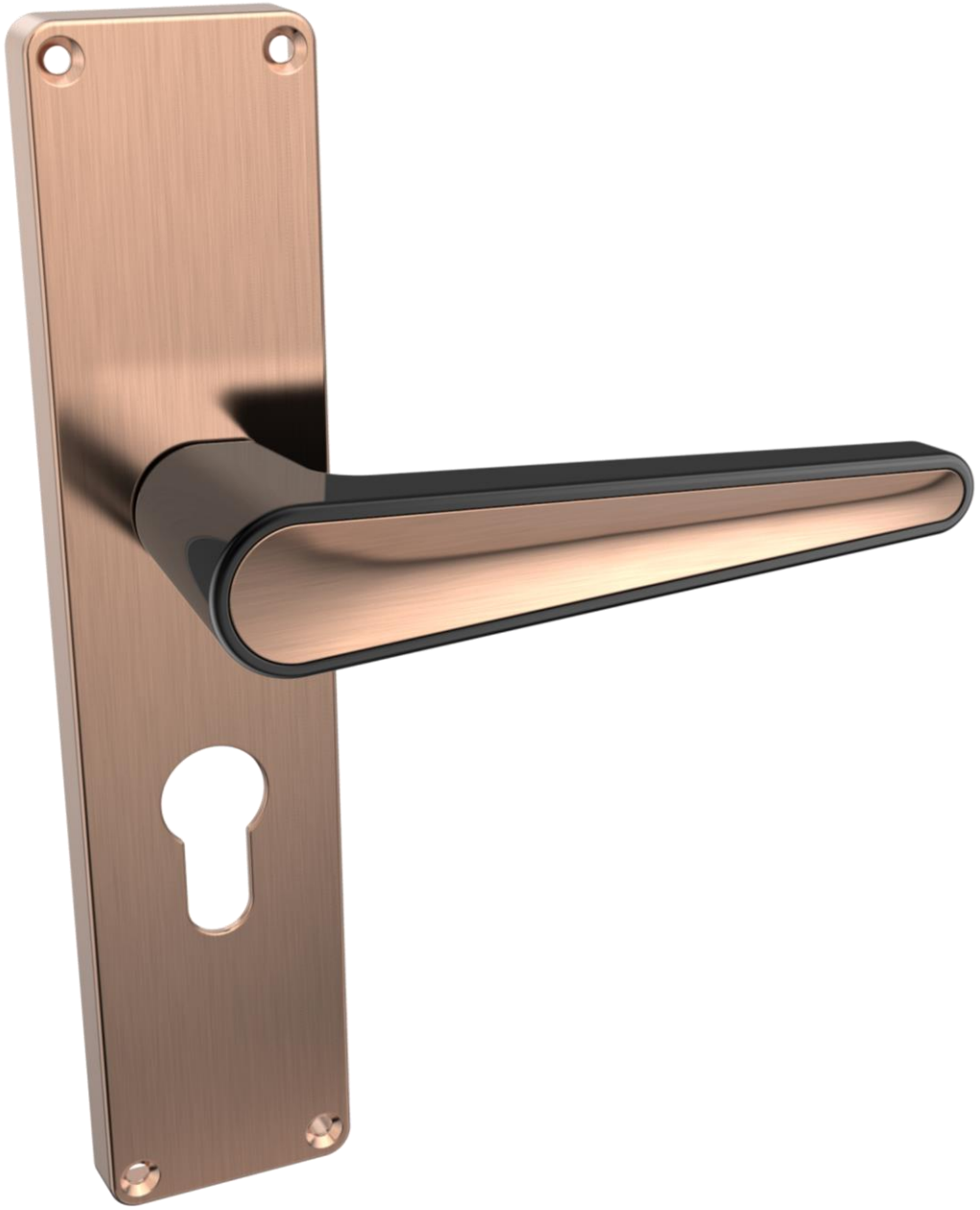

Design Name: NEH 19

Finish Name: Black Antique Copper

Available Variants:

1. 240 mm 2C Combipack
2. 240 mm 1CK Combipack
3. 200 mm 2C Combipack
4. 200 mm 1CK Combipack
5. Baby Latch Set
6. Rosette

Lock Body Finish: Antique Copper

Cylinder Finish: Antique Copper

Godrej
INCRUST
PREMIUM RANGE OF FINISHES.

Design Name: NEH 19

Finish Name: Matt Black Nickel

Available Variants:

1. 240 mm 2C Combipack
2. 240 mm 1CK Combipack
3. 200 mm 2C Combipack
4. 200 mm 1CK Combipack
5. Baby Latch Set
6. Rosette

Lock Body Finish: Glossy Black

Cylinder Finish: Matt Black Nickel

Godrej
INCRUST
PREMIUM RANGE OF FINISHES.

Design Name: NEH 19

Finish Name: Matt Black Rose

Available Variants:

1. 240 mm 2C Combipack
2. 240 mm 1CK Combipack
3. 200 mm 2C Combipack
4. 200 mm 1CK Combipack
5. Baby Latch Set
6. Rosette

Lock Body Finish: Glossy Black

Cylinder Finish: Matt Black

Godrej
INCRUST
PREMIUM RANGE OF FINISHES.

Design Name: NEH 20

Finish Name: Satin Steel

Available Variants:

1. 240 mm 2C Combipack
2. 240 mm 1CK Combipack
3. 200 mm 2C Combipack
4. 200 mm 1CK Combipack
5. Baby Latch Set
6. Rosette

New Approach

7. 200 mm Handle & Lock Body Combipack
8. 240 mm Handle & Lock Body Combipack

Lock Body Finish: Chrome

Cylinder Finish: Satin Nickel

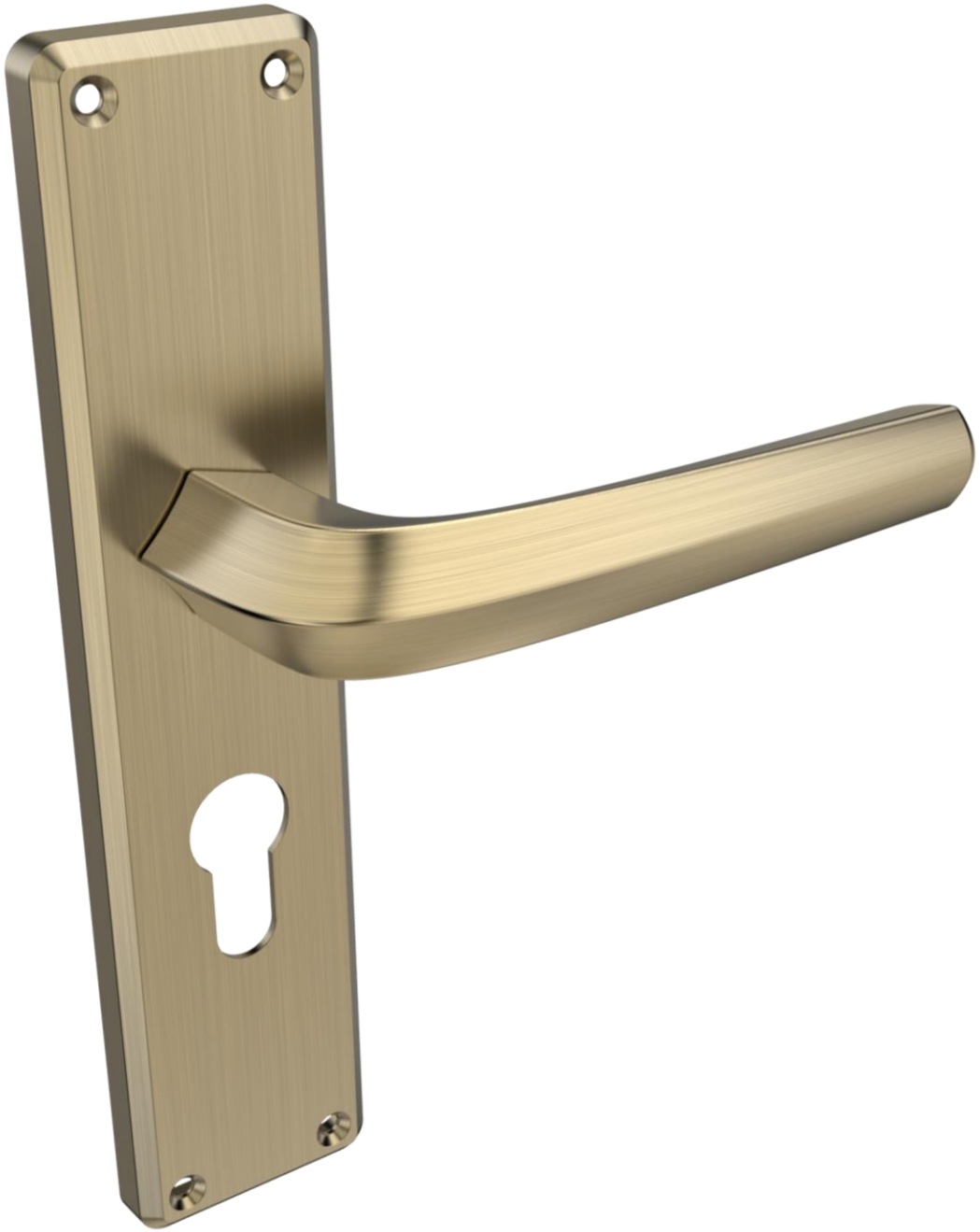

Godrej
INCRUST
PREMIUM RANGE OF FINISHES.

Design Name: NEH 20

Finish Name: Antique Brass

Available Variants:

1. 240 mm 2C Combipack
2. 240 mm 1CK Combipack
3. 200 mm 2C Combipack
4. 200 mm 1CK Combipack
5. Baby Latch Set
6. Rosette

New Approach

7. 200 mm Handle & Lock Body Combipack
8. 240 mm Handle & Lock Body Combipack

Lock Body Finish: Antique Brass

Cylinder Finish: Antique Brass

Godrej INCRUST
PREMIUM RANGE OF FINISHES.

Design Name: NEH 20

Finish Name: Antique Copper

Available Variants:

1. 240 mm 2C Combipack
2. 240 mm 1CK Combipack
3. 200 mm 2C Combipack
4. 200 mm 1CK Combipack
5. Baby Latch Set
6. Rosette

Lock Body Finish: Antique Copper

Cylinder Finish: Antique Copper

Godrej
INCRUST
PREMIUM RANGE OF FINISHES.

Design Name: NEH 20

Finish Name: Matt Black Nickel

Available Variants:

1. 240 mm 2C Combipack
2. 240 mm 1CK Combipack
3. 200 mm 2C Combipack
4. 200 mm 1CK Combipack
5. Baby Latch Set
6. Rosette

Lock Body Finish: Glossy Black

Cylinder Finish: Matt Black Nickel

Godrej INCRUST
PREMIUM RANGE OF FINISHES.

Design Name: NEH 20

Finish Name: Matt Black

Available Variants:

1. 240 mm 2C Combipack
2. 240 mm 1CK Combipack
3. 200 mm 2C Combipack
4. 200 mm 1CK Combipack
5. Baby Latch Set
6. Rosette

Lock Body Finish: Glossy Black

Cylinder Finish: Matt Black

Godrej INCRUST
PREMIUM RANGE OF FINISHES.

Positioning:

Design & Finish driven popular mortise market

Premium range of finishes for interior designers & architect influenced home interiors

Applications:

Doors in homes, offices, conference rooms, hotels and other commercial spaces:

Main Door: 240 mm handle set or Rosette
Internal Door: 200 mm handle or Rosette
Washroom Door: Baby Latch set

Suitable for door thickness 28 mm to 40 mm.

Operation:

Lock Body when fitted with Handle set & Euro profile Pin Cylinder:
Turning the handle retracts the Latch bolt
One turn of the key from outside or inside throws the Dead bolt out by 10 mm. A further one turn throws the bolt by another 10 mm. (Use knob from inside for 1CK)
Two reverse turns of the key retracts the Dead bolt, and a further half turn will retract the Latch bolt

Godrej INCRUST
PREMIUM RANGE OF FINISHES.

Testing Parameters

Test	Duration	Application
Solvent resistance double rubs (Acetone test)	150+	For finish
Pencil hardness	4 H +	For finish
Corrosion resistance (Salt spray test)	96 Hrs +	For finish
Handle life cycle test	50000+	Durability
Cylinder life cycle test	50000+	Durability
Lock life cycle test	50000+	Durability

Packaging Content

Model	Contents
240 mm 2C 240 mm 1CK 200 mm 2C 200 mm 1CK	2 Unit Handles, 1 Unit Mortise Lock, 1 Unit Pin Cylinder, 3 Unit Keys, 1 Unit Cylinder Screw, 1 Unit Striker Plate, 1 Unit Bolt Cover, 1 Unit Square Shank, 1 Unit Screw Packet
Rossete	2 Unit Handles, 2 Unit Euro Rosettes, 1 Unit Square Shank, 1 Unit Allen Key, 1 Unit Screw Packet
Baby Latch	2 Unit Handles, 1 Unit Mortise Latch, 1 Unit Striker Plate, 1 Unit Square Shank, 1 Unit Allen Key, 1 Unit Screw Packet
240 mm Handle & Lock Body combi 200 mm Handle & Lock Body Combi	2 Unit Handles, 1 Unit Mortise Lock, 1 Unit Striker Plate, 1 Unit Bolt Cover, 1 Unit Square Shank, 1 Unit Screw Packet

Godrej
INCRUST
PREMIUM RANGE OF FINISHES.

Technical Specifications

Component	Remarks
Technology	Pin Cylinder
Lock Body	CRCA Steel
Cover Plate	Mazak
Handle	Mazak
Latch Bolt	Mazak
Dead Bolt	Mazak
Forend Plate & Striker Plate	CRCA Steel
Keys	Brass
Cylinder	Mazak

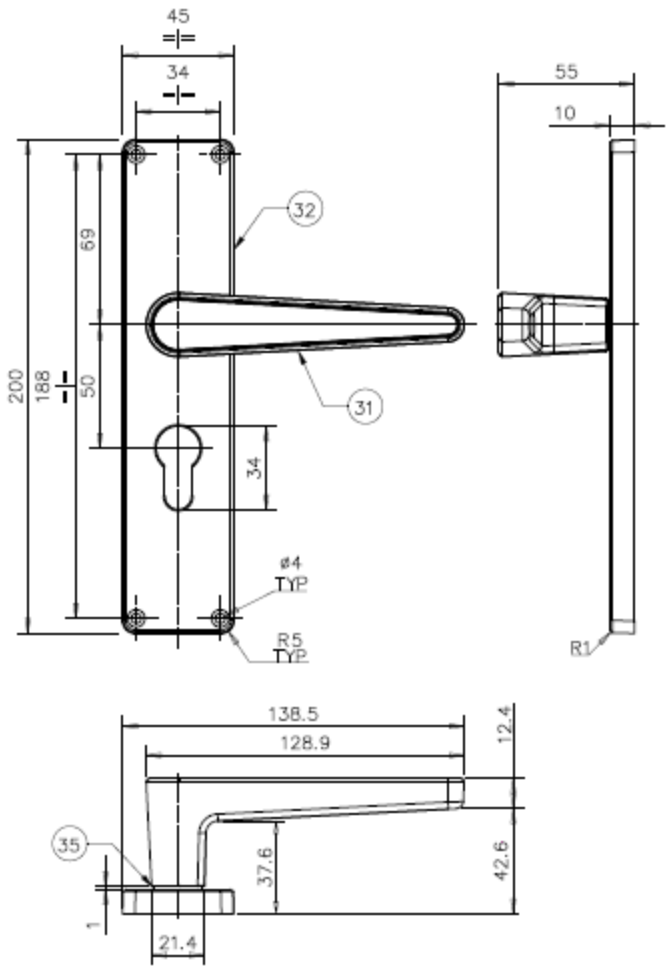

NEH 19

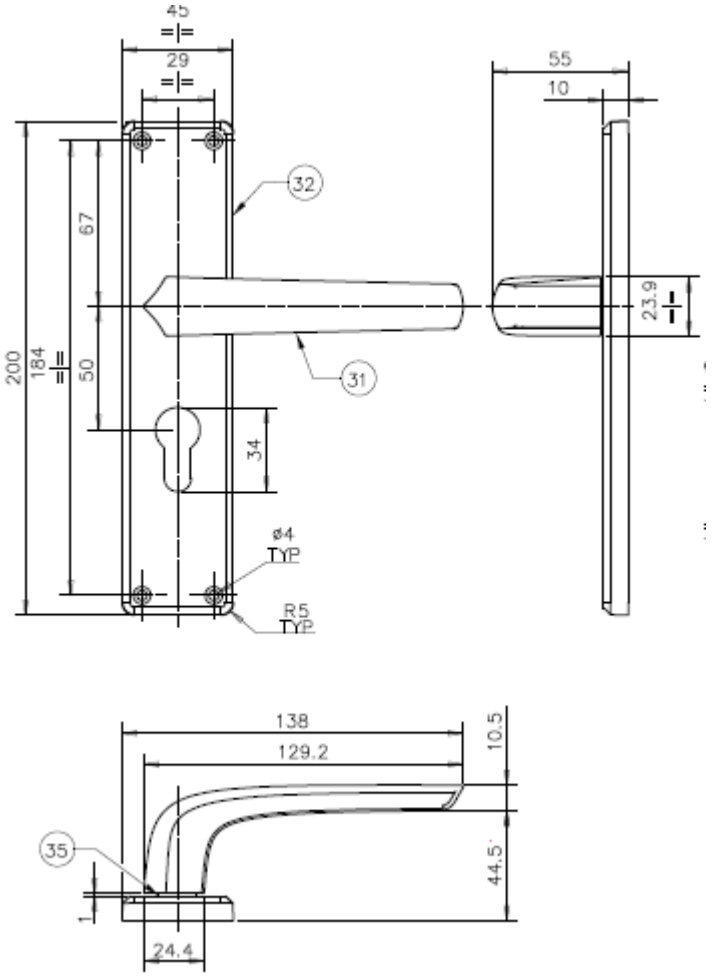

NEH 20

SKU List: Satin Steel Finish

Godrej INCRUST
PREMIUM RANGE OF FINISHES.

Product Description	Product Code	UNSPSC code	MRP	Standard Packaging
NEH 19 Door Handle Set 2C 240 mm - SS	2660	46171598SD01862	3250	4
NEH 19 Door Handle Set 1CK 240 mm - SS	2661	46171598SD01863	3300	4
NEH 19 Door Handle Set 2C 200 mm - SS	2662	46171598SD01864	2850	4
NEH 19 Door Handle Set 1CK 200 mm - SS	2663	46171598SD01865	2910	4
NEH 19 Baby Latch - SS	2664	46171598SD01866	1900	4
NEH 19 Rossete - SS	2665	46171598SD01867	1850	4
NEH 19 Handle & Lock Body Combi 240 mm - SS	2666	46171598SD01868	2610	4
NEH 19 Handle & Lock Body Combi 200 mm - SS	2667	46171598SD01869	2220	4
NEH 20 Door Handle Set 2C 240 mm - SS	2945	46171598SD01870	3250	4
NEH 20 Door Handle Set 1CK 240 mm - SS	2946	46171598SD01871	3300	4
NEH 20 Door Handle Set 2C 200 mm - SS	2947	46171598SD01872	2850	4
NEH 20 Door Handle Set 1CK 200 mm - SS	2948	46171598SD01873	2910	4
NEH 20 Baby Latch - SS	2949	46171598SD01874	1900	4
NEH 20 Rossete - SS	2950	46171598SD01875	1850	4
NEH 20 Handle & Lock Body Combi 240 mm - SS	2951	46171598SD01876	2610	4
NEH 20 Handle & Lock Body Combi 200 mm - SS	2952	46171598SD01877	2220	4

SKU List: Antique Brass Finish

Godrej INCRUST
PREMIUM RANGE OF FINISHES.

Product Description	Product Code	UNSPSC code	MRP	Standard Packaging
NEH 19 Door Handle Set 2C 240 mm - AB	2953	46171598SD01878	3350	4
NEH 19 Door Handle Set 1CK 240 mm - AB	2954	46171598SD01879	3400	4
NEH 19 Door Handle Set 2C 200 mm - AB	2955	46171598SD01880	2950	4
NEH 19 Door Handle Set 1CK 200 mm - AB	2956	46171598SD01881	3010	4
NEH 19 Baby Latch - AB	2957	46171598SD01882	1950	4
NEH 19 Rossete - AB	2958	46171598SD01883	1900	4
NEH 19 Handle & Lock Body Combi 240 mm - AB	2959	46171598SD01884	2710	4
NEH 19 Handle & Lock Body Combi 200 mm - AB	2960	46171598SD01885	2320	4
NEH 20 Door Handle Set 2C 240 mm - AB	3132	46171598SD01886	3350	4
NEH 20 Door Handle Set 1CK 240 mm - AB	3133	46171598SD01887	3400	4
NEH 20 Door Handle Set 2C 200 mm - AB	3134	46171598SD01888	2950	4
NEH 20 Door Handle Set 1CK 200 mm - AB	3135	46171598SD01889	3010	4
NEH 20 Baby Latch - AB	3136	46171598SD01890	1950	4
NEH 20 Rossete - AB	3137	46171598SD01891	1900	4
NEH 20 Handle & Lock Body Combi 240 mm - AB	3138	46171598SD01892	2710	4
NEH 20 Handle & Lock Body Combi 200 mm - AB	3139	46171598SD01893	2320	4

SKU List: Matt Black & Matt Black Rose

Godrej INCRUST
PREMIUM RANGE OF FINISHES.

Product Description	Product Code	UNSPSC code	MRP	Standard Packaging
NEH 19 Door Handle Set 2C 240 mm - MBR	3201	46171598SD01919	3500	4
NEH 19 Door Handle Set 1CK 240 mm - MBR	3202	46171598SD01920	3550	4
NEH 19 Door Handle Set 2C 200 mm - MBR	3203	46171598SD01921	3100	4
NEH 19 Door Handle Set 1CK 200 mm - MBR	3204	46171598SD01922	3160	4
NEH 19 Baby Latch - MBR	3205	46171598SD01923	2050	4
NEH 19 Rossete - MBR	3206	46171598SD01924	2000	4
NEH 20 Door Handle Set 2C 240 mm - MB	3207	46171598SD01925	3500	4
NEH 20 Door Handle Set 1CK 240 mm - MB	3208	46171598SD01926	3550	4
NEH 20 Door Handle Set 2C 200 mm - MB	3209	46171598SD01927	3100	4
NEH 20 Door Handle Set 1CK 200 mm - MB	3210	46171598SD01928	3160	4
NEH 20 Baby Latch - MB	3211	46171598SD01929	2050	4
NEH 20 Rossete - MB	3212	46171598SD01930	2000	4
Gloria Door Handle Set 2C 240 mm - MBR	3521	46171598SD01943	5090	4
Gloria Door Handle Set 1CK 240 mm - MBR	3522	46171598SD01944	5150	4
Gloria Door Handle Set 2C 200 mm - MBR	3523	46171598SD01945	4520	4
Gloria Door Handle Set 1CK 200 mm - MBR	3524	46171598SD01946	4600	4
Gloria Baby Latch - MBR	3525	46171598SD01947	2560	4
Gloria Rossete - MBR	3526	46171598SD01948	2500	4
NEH 06 Door Handle Set 2C 240 mm - MBR	3565	46171598SD01949	5090	4
NEH 06 Door Handle Set 1CK 240 mm - MBR	3566	46171598SD01950	5150	4
NEH 06 Door Handle Set 2C 200 mm - MBR	3567	46171598SD01951	4520	4
NEH 06 Door Handle Set 1CK 200 mm - MBR	3568	46171598SD01952	4600	4
NEH 06 Baby Latch - MBR	3569	46171598SD01953	2560	4
NEH 06 Rossete - MBR	3570	46171598SD01954	2500	4

SKU List: Antique Copper & Black Antique Copper

Godrej INCRUST
PREMIUM RANGE OF FINISHES.

Product Description	Product Code	UNSPSC code	MRP	Standard Packaging
NEH 19 Door Handle Set 2C 240 mm - BAC	3213	46171598SD01931	3500	4
NEH 19 Door Handle Set 1CK 240 mm - BAC	3214	46171598SD01932	3550	4
NEH 19 Door Handle Set 2C 200 mm - BAC	3215	46171598SD01933	3100	4
NEH 19 Door Handle Set 1CK 200 mm - BAC	3216	46171598SD01934	3160	4
NEH 19 Baby Latch - BAC	3217	46171598SD01935	2050	4
NEH 19 Rossete - BAC	3218	46171598SD01936	2000	4
NEH 20 Door Handle Set 2C 240 mm - AC	3219	46171598SD01937	3500	4
NEH 20 Door Handle Set 1CK 240 mm - AC	3220	46171598SD01938	3550	4
NEH 20 Door Handle Set 2C 200 mm - AC	3221	46171598SD01939	3100	4
NEH 20 Door Handle Set 1CK 200 mm - AC	3222	46171598SD01940	3160	4
NEH 20 Baby Latch - AC	3223	46171598SD01941	2050	4
NEH 20 Rossete - AC	3224	46171598SD01942	2000	4
Gloria Door Handle Set 2C 240 mm - BAC	3672	46171598SD01955	5090	4
Gloria Door Handle Set 1CK 240 mm - BAC	3673	46171598SD01956	5150	4
Gloria Door Handle Set 2C 200 mm - BAC	3674	46171598SD01957	4520	4
Gloria Door Handle Set 1CK 200 mm - BAC	3675	46171598SD01958	4600	4
Gloria Baby Latch - BAC	3676	46171598SD01959	2560	4
Gloria Rossete - BAC	3677	46171598SD01960	2500	4
NEH 06 Door Handle Set 2C 240 mm - BAC	3706	46171598SD01961	5090	4
NEH 06 Door Handle Set 1CK 240 mm - BAC	3707	46171598SD01962	5150	4
NEH 06 Door Handle Set 2C 200 mm - BAC	3708	46171598SD01963	4520	4
NEH 06 Door Handle Set 1CK 200 mm - BAC	3709	46171598SD01964	4600	4
NEH 06 Baby Latch - BAC	3710	46171598SD01965	2560	4
NEH 06 Rossete - BAC	3711	46171598SD01966	2500	4

SKU List: Matt Black Nickel

Godrej INCRUST
PREMIUM RANGE OF FINISHES.

Product Description	Product Code	UNSPSC code	MRP	Standard Packaging
NEH 19 Door Handle Set 2C 240 mm - MBN	3250	46171598SD01895	3500	4
NEH 19 Door Handle Set 1CK 240 mm - MBN	3251	46171598SD01896	3550	4
NEH 19 Door Handle Set 2C 200 mm - MBN	3252	46171598SD01897	3100	4
NEH 19 Door Handle Set 1CK 200 mm - MBN	3253	46171598SD01898	3160	4
NEH 19 Baby Latch - MBN	3254	46171598SD01899	2050	4
NEH 19 Rossete - MBN	3255	46171598SD01900	2000	4
NEH 20 Door Handle Set 2C 240 mm - MBN	3321	46171598SD01901	3500	4
NEH 20 Door Handle Set 1CK 240 mm - MBN	3322	46171598SD01902	3550	4
NEH 20 Door Handle Set 2C 200 mm - MBN	3323	46171598SD01903	3100	4
NEH 20 Door Handle Set 1CK 200 mm - MBN	3324	46171598SD01904	3160	4
NEH 20 Baby Latch - MBN	3325	46171598SD01905	2050	4
NEH 20 Rossete - MBN	3326	46171598SD01906	2000	4
Gloria Door Handle Set 2C 240 mm - MBN	3720	46171598SD01907	5090	4
Gloria Door Handle Set 1CK 240 mm - MBN	3721	46171598SD01908	5150	4
Gloria Door Handle Set 2C 200 mm - MBN	3722	46171598SD01909	4520	4
Gloria Door Handle Set 1CK 200 mm - MBN	3723	46171598SD01910	4600	4
Gloria Baby Latch - MBN	3724	46171598SD01911	2560	4
Gloria Rossete - MBN	3725	46171598SD01912	2500	4
NEH 06 Door Handle Set 2C 240 mm - MBN	3735	46171598SD01913	5090	4
NEH 06 Door Handle Set 1CK 240 mm - MBN	3736	46171598SD01914	5150	4
NEH 06 Door Handle Set 2C 200 mm - MBN	3737	46171598SD01915	4520	4
NEH 06 Door Handle Set 1CK 200 mm - MBN	3738	46171598SD01916	4600	4
NEH 06 Baby Latch - MBN	3739	46171598SD01917	2560	4
NEH 06 Rossete - MBN	3740	46171598SD01918	2500	4

SKU List: Lock Bodies & Cylinders

Godrej INCRUST
PREMIUM RANGE OF FINISHES.

Product Description	Product Code	UNSPSC code	MRP	Standard Packaging
240 mm LB Glossy Black	3951	46171598SD01967	1010	10
240 mm LB Ant. Copper	3952	46171598SD01968	1010	10
Eco 60 mm 1CK MBN Cyl	3953	46171598SD01969	840	10
Eco 60 mm 2C MBN Cyl	3954	46171598SD01970	800	10
Eco 70 mm 1CK MBN Cyl	3955	46171598SD01971	920	10
Eco 70 mm 2C MBN Cyl	3956	46171598SD01972	850	10
Eco 60 mm 1CK MB Cyl	3957	46171598SD01973	840	10
Eco 60 mm 2C MB Cyl	3958	46171598SD01974	800	10
Eco 70 mm 1CK MB Cyl	3959	46171598SD01975	920	10
Eco 70 mm 2C MB Cyl	3960	46171598SD01976	850	10
Eco 60 mm 1CK BAC Cyl	3961	46171598SD01977	840	10
Eco 60 mm 2C BAC Cyl	3962	46171598SD01978	800	10
Eco 70 mm 1CK BAC Cyl	3963	46171598SD01979	920	10
Eco 70 mm 2C BAC Cyl	3964	46171598SD01980	850	10
Eco 60 mm 1CK AB Cyl	3965	46171598SD01981	820	10
Eco 60 mm 2C AB Cyl	3966	46171598SD01982	780	10
Eco 70 mm 1CK AB Cyl	3967	46171598SD01983	900	10
Eco 70 mm 2C AB Cyl	3968	46171598SD01984	830	10

Godrej

INCRUST

PREMIUM RANGE OF FINISHES.

Thank You!